ELEKTRONIKA

(pisni izpit: 31.1.2003)

Čas reševanja: 90 minut
Teža nalog: 25+25+25+25=100%

1. naloga (25%)

Izračunajte vrednost upora R_2, ki ga moramo vezati k znanemu uporu R_1, da bo vezje temperaturno kompenzirano (skupna upornost neodvisna od temperature). Kakšno vezavo uporov R_1 in R_2 moramo uporabiti (vzporedno ali zaporedno)? Dokaz!

$R_1 = 4{,}7\ \mathrm{k\Omega}$; $\alpha_1 = +0{,}004/°\mathrm{C}$ (znani upor)

$R_2 = ?$; $\alpha_1 = -0{,}0015/°\mathrm{C}$ (iskani upor z znanim temperaturnim koeficientom)

$$\alpha = \frac{\Delta R}{R_0 \cdot \Delta\vartheta} \Rightarrow \Delta R = \alpha \cdot R_0 \cdot \Delta\vartheta \Rightarrow R = R_0\left(1 + \alpha \cdot \Delta\vartheta\right) \quad \text{(def. temp. koeficienta)}$$

2. naloga (25%)

Prikazano vezje ojačevalnika naj deluje v predpisani delovni točki.

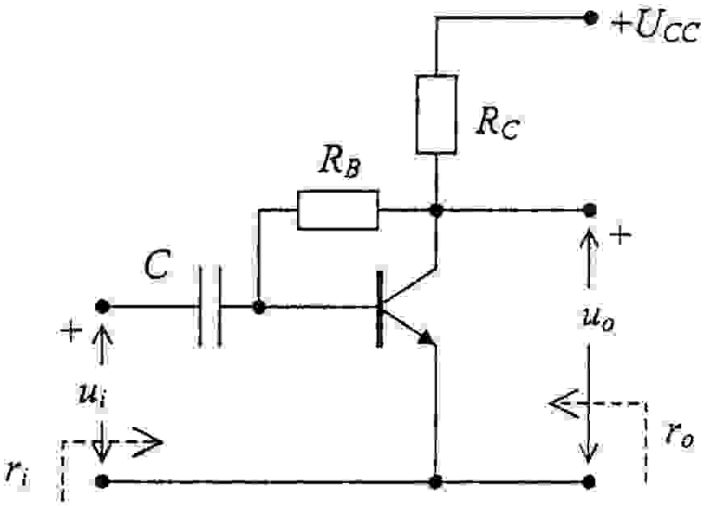

Za delovno točko:
$U_{CEQ} = 10$ V
$I_{CQ} = 18$ mA
$I_{BQ} = 75\ \mu$A
$U_{BEQ} = 0{,}7$ V
$U_{CC} = 20$ V

Parametri tranzistorja:
$h_{ie}(h_{11e}) = 1{,}4\ \mathrm{k\Omega}$
$h_{re}(h_{12e}) = 4 \cdot 10^{-4}$
$h_{fe}(h_{21e}) = 150$
$h_{oe}(h_{22e}) = 400\ \mu$S

- Določite vrednosti uporov v vezju za predpisano delovno točko.
- Narišite nadomestno shemo ojačevalnika za majhne izmenične signale.
- Izračunajte vhodno in izhodno notranjo upornost (r_i in r_o) ter napetostno ojačanje A_u za neobremenjen ojačevalnik. Pri tem izračunu zanemarite vpliv C in R_B na vezje ($C \to \infty$, $R_B \to \infty$).

3. naloga (25%)

Ojačevalnik z JFET tranzistorjem na sliki naj deluje v predvideni delovni točki.

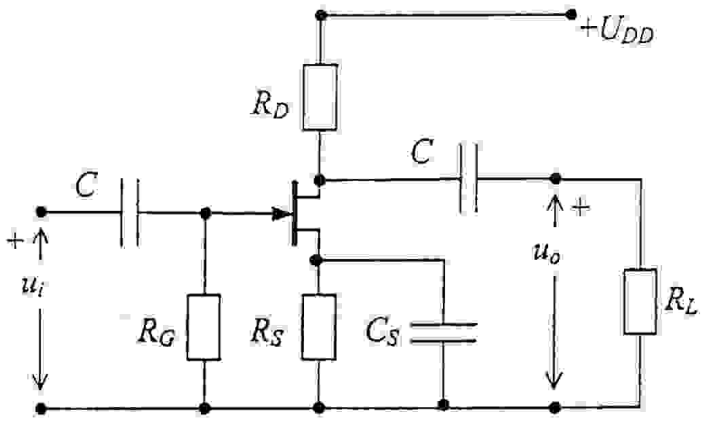

Zahteve za delovno točko:

$I_{DQ} = 2{,}2$ mA
$U_{DSQ} = 8$ V
$U_{GSQ} = -1{,}8$ V

Tranzistor:

$r_D = 10$ kΩ
$g_m = 5$ mS

Ostalo:

$U_{DD} = 20$ V
$R_G = 1$ MΩ
$C = C_S = \infty$

- Določite upora R_D in R_S za zahtevano delovno točko.
- Narišite nadomestno shemo ojačevalnika za majhne izmenične signale.
- Izračunajte napetostno ojačanje neobremenjenega ojačevalnika ($R_L = \infty$).
- Določite breme R_L, pri katerem bo napetostno ojačanje enako -5.

4. naloga (25%)

Narišite poenostavljeni shemi za vezje na sliki (b), ki približno veljata pri frekvencah 10 Hz in 2 MHz. Izpeljite izraza za izhodni signal kot funkcijo vhodnega signala pri obeh frekvencah. Skicirajte potek izhodnega signala pri obeh frekvencah za sinusni vhodni signal na sliki (a). Pazite na pravilno oznako amplitude in faze!

$R_1 = 1$ kΩ; $C_1 = 16$ nF; $R_2 = 2$ kΩ; $C_2 = 80$ nF
$u_{vh} = U_{vh} \sin \omega t$; $U_{vh} = 20$ mV

(a)

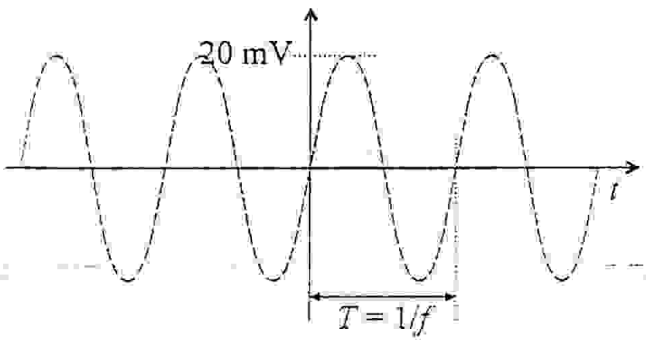

(b)

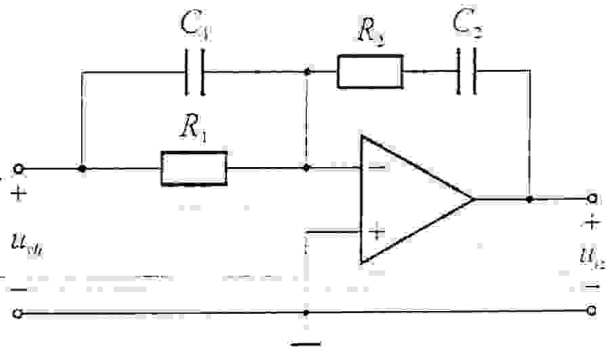

naloga 31.1.22

Vzporedna vezava

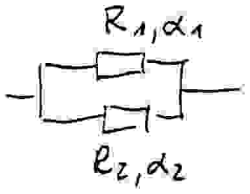

$$\frac{1}{R} = \frac{1}{R_1} + \frac{1}{R_2} = \text{konst!}$$

$$\frac{1}{R} = \frac{1}{R_1(1+\alpha_1\Delta\vartheta)} + \frac{1}{R_2(1+\alpha_2\Delta\vartheta)} = \frac{R_2(1+\alpha_2\Delta\vartheta) + R_1(1+\alpha_1\Delta\vartheta)}{R_1R_2(1+\alpha_1\Delta\vartheta)(1+\alpha_2\Delta\vartheta)} =$$

$$= \frac{R_1 + R_2 + R_1\alpha_1\Delta\vartheta + R_2\alpha_2\Delta\vartheta}{R_1R_2(1+\alpha_1\Delta\vartheta)(1+\alpha_2\Delta\vartheta)}$$

NI MOŽNO izločiti $\Delta\vartheta$!

veljati mora $\frac{1}{R_1} + \frac{1}{R_2} = \frac{1}{R_1(1+\alpha_1\Delta\vartheta)} + \frac{1}{R_2(1+\alpha_2\Delta\vartheta)}$

$$\Rightarrow \frac{1+\alpha_1\Delta\vartheta - 1}{R_1(1+\alpha_1\Delta\vartheta)} = \frac{1-1-\alpha_2\Delta\vartheta}{R_2(1+\alpha_2\Delta\vartheta)}$$

$$\Rightarrow \frac{\alpha_1\cancel{\Delta\vartheta}}{R_1(1+\alpha_1\Delta\vartheta)} = -\frac{\alpha_2\cancel{\Delta\vartheta}}{R_2(1+\alpha_2\Delta\vartheta)}$$

$$\Rightarrow \boxed{R_2 = -\frac{\alpha_2(1+\alpha_1\Delta\vartheta)}{\alpha_1(1+\alpha_2\Delta\vartheta)}R_1}$$

$\Rightarrow$ vsak $\Delta\vartheta$ zahteva drug R_2

$\Rightarrow$ kompenzacija ni možna

Zaporedna vezava

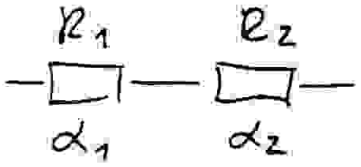

$$R_1 + R_2 = R_1(1+\alpha_1 \Delta\vartheta) + R_2(1+\alpha_2 \Delta\vartheta$$

$$\Rightarrow R_1(1 - 1 - \alpha_1 \Delta\vartheta) = R_2(1+\alpha_2 \Delta\vartheta - 1)$$

$$\Rightarrow -R_1 \alpha_1 \cancel{\Delta\vartheta} = R_2 \alpha_2 \cancel{\Delta\vartheta}$$

$$\Rightarrow \boxed{R_2 = -R_1 \frac{\alpha_1}{\alpha_2}} = -4{,}7k \cdot \frac{0{,}004}{-0{,}0015} = \underline{\underline{12{,}53k\Omega}}$$

$\Rightarrow$ kompenzacija O.K.

2. naloga 31. 1. 2003

Delovna točka

$$R_C = \frac{U_{RC}}{I_{RC}} = \frac{U_{CC} - U_{CEQ}}{I_{CQ} + I_{BQ}} = \frac{20 - 10}{18m + 75\mu} = \underline{\underline{553{,}3\,\Omega}}$$

$$R_B = \frac{U_{RB}}{I_{RB}} = \frac{U_{CEQ} - U_{BEQ}}{I_{BQ}} = \frac{10 - 0{,}7}{75\mu} = \underline{\underline{124\,k\Omega}}$$

Nadomestna shema

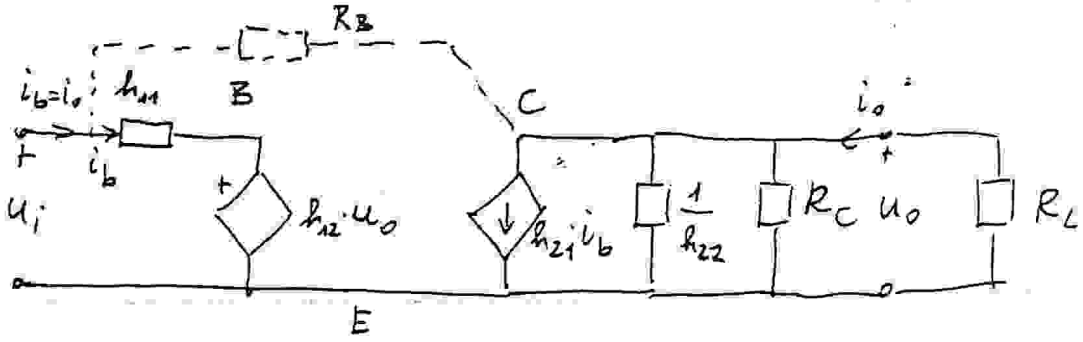

$$A_u = \frac{u_o}{u_i}$$

$$u_o = -h_{21} i_b \cdot \frac{1}{h_{22}} \| R_C = \cancel{}$$

$$\frac{1}{h_{22}} \| R_C = \frac{2500 \cdot 553}{3053} = \underline{\underline{453\,\Omega}}$$

$$u_i = i_b \cdot h_{11} + h_{12} u_o = i_b \cdot h_{11} + h_{12}\left(-h_{21} i_b \frac{1}{h_{22}} \| R_C\right)$$

$$= i_b \left(h_{11} - h_{12} h_{21} \frac{1}{h_{22}} \| R_C \right)$$

$$A_{u_{nedb.}} = \frac{u_o}{u_i} = -\frac{h_{21} \cdot \frac{1}{h_{22}} \| R_C}{h_{11} - h_{12} h_{21} \cdot \frac{1}{h_{22}} \| R_C}$$

$$= -\frac{150 \cdot 453}{1400 - 400\mu \cdot 150 \cdot 453} = \underline{\underline{-49{,}5}}$$

$$\cancel{A_{u_{R_L}} = \frac{u_o}{u_i} = -h_{21}}$$

$$r_i = \frac{u_i}{i_i} = \frac{i_b\left(h_{11} - h_{12}h_{21}\frac{1}{h_{22}} \| R_C\right)}{i_b} =$$

$$= 1400 - 400\mu \cdot 150 \cdot 453 = \underline{\underline{1373\,\Omega}}$$

$$r_o = \left.\frac{u_o}{i_o}\right|_{u_i = 0} = \frac{i_o \cdot \frac{1}{h_{22}} \| R_C}{i_o} = \frac{1}{h_{22}} \| R_C = \underline{\underline{453\,\Omega}}$$

naloga 31. 1. 2003

lovna točka

$$R_S = \frac{U_{RS}}{I_{RS}} = \frac{-U_{GSQ}}{I_{DQ}} = \frac{1,8}{2,2m} = \underline{\underline{818\,\Omega}}$$

$$R_D = \frac{U_{RD}}{I_{RD}} = \frac{U_{DD} - U_{DSQ} - U_{RS}}{I_{DQ}} = \frac{20-8-1,8}{2,2m} = \underline{\underline{4,64\,k\Omega}}$$

domačna shema

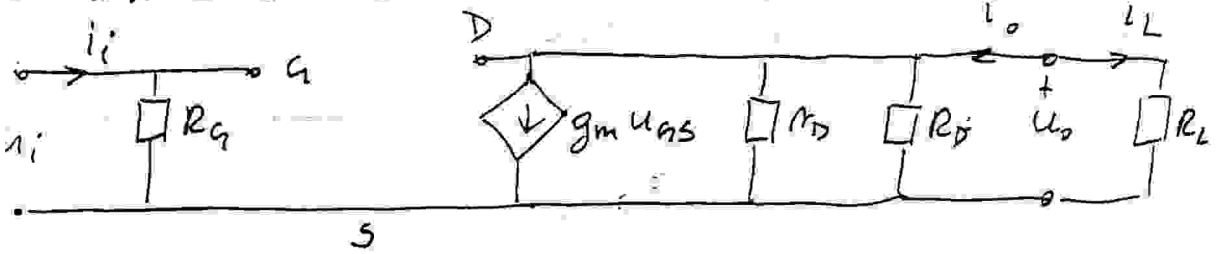

$$A_u = \frac{u_o}{u_i}$$

$$u_o = -g_m u_{GS}\, r_D \| R_D$$

$$r_D \| R_D = R_D' = \frac{10k \cdot 4,64k}{14,64k} = \underline{\underline{3,17\,k\Omega}}$$

$$u_i = u_{GS}$$

$$A_{u_{neobr.}} = -\frac{g_m \cdot r_D \| R_D}{1} = -5m \cdot 3,17k = \underline{\underline{-15,8}}$$

$$A_{u_{obr}} = -g_m R_D' \| R_L = -g_m R_D' \cdot R_L / (R_D' + R_L)$$

$$A_u (R_D' + R_L) = -g_m R_D' R_L$$

$$A_u R_D' = -R_L (g_m R_D' + A_u)$$

$$\Rightarrow R_L = -\frac{A_u R_D'}{g_m R_D' + A_u} = -\frac{-5 \cdot 3,17k}{5m \cdot 3,17k - 5} = \cancel{7600}$$

$$\underline{\underline{1460\,\Omega}}$$

4. naloga 31. 1. 2003

$f_1 = 10\,Hz$: $|Z_{C1}| = \frac{1}{2\pi f_1 C_1} = \frac{1}{2\pi\, 10 \cdot 16n} \doteq \underline{\underline{995\,k\Omega}} \gg R_1$

$\Rightarrow \underline{\underline{C_1 \parallel R_1 \doteq R_1}}$

$|Z_{C2}| = \frac{1}{2\pi\, 10 \cdot 80n} \doteq \underline{\underline{199\,k\Omega}} \gg R_2$

$\Rightarrow \underline{\underline{C_2 + R_2 \doteq C_2}}$

$f_2 = 2\,MHz$: $|Z_{C1}| = \frac{1}{2\pi \cdot 2M \cdot 16n} \doteq \underline{\underline{4{,}97\,\Omega}} \ll R_1$

$\Rightarrow \underline{\underline{C_1 \parallel R_1 \doteq C_1}}$

$|Z_{C2}| = \frac{1}{2\pi \cdot 2M \cdot 80n} \doteq \underline{\underline{1\,\Omega}} \ll R_2$

$\Rightarrow \underline{\underline{C_2 + R_2 \doteq R_2}}$

f_1 :

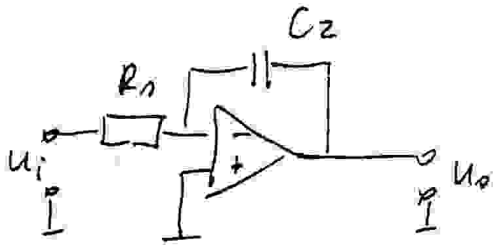

3

INTEGRATOR

$$\frac{u_i}{R_1} + C_2 \frac{du_o}{dt} = 0 \Rightarrow \underline{\underline{u_o = -\frac{1}{R_1 C_2} \int u_i \, dt}}$$ 2

$$u_o = -\frac{U_i}{R_1 C_2} \int \sin 2\pi f_1 t \, dt = +\frac{U_i}{R_1 C_2} \cdot \frac{1}{2\pi f_1} \cos \omega t$$

$$= \frac{U_i}{2\pi f_1 R_1 C_2} \cdot \cos \omega t = \underbrace{\frac{20m}{2\pi\, 10 \cdot 1k \cdot 80n}}_{\text{amplitude}} \cos \omega t$$

3

$$= \underline{\underline{3{,}98V \cdot \cos \omega t}}$$

f_2 :

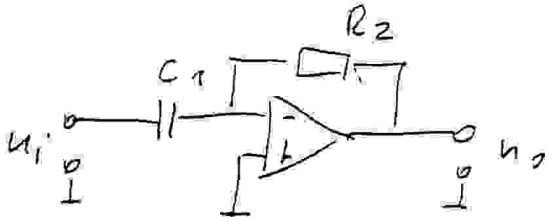

: DIFERECIATOR

$$C_1 \frac{du_i}{dt} + \frac{u_o}{R_2} = \emptyset \Rightarrow u_o = -R_2 C_1 \frac{du_i}{dt}$$

$$u_o = -R_2 C_1 \cdot U_i \cdot \frac{d}{dt}(\sin 2\pi f_2 t) = \underbrace{-2\pi f_2 R_2 C_1 U_i}_{\text{ampl.}} \cos\omega t$$

$$= -2\pi\, 2M\, 2k\, 16n\, 20m \cos\omega t$$

$$= -8{,}04V \cdot \cos\omega t$$

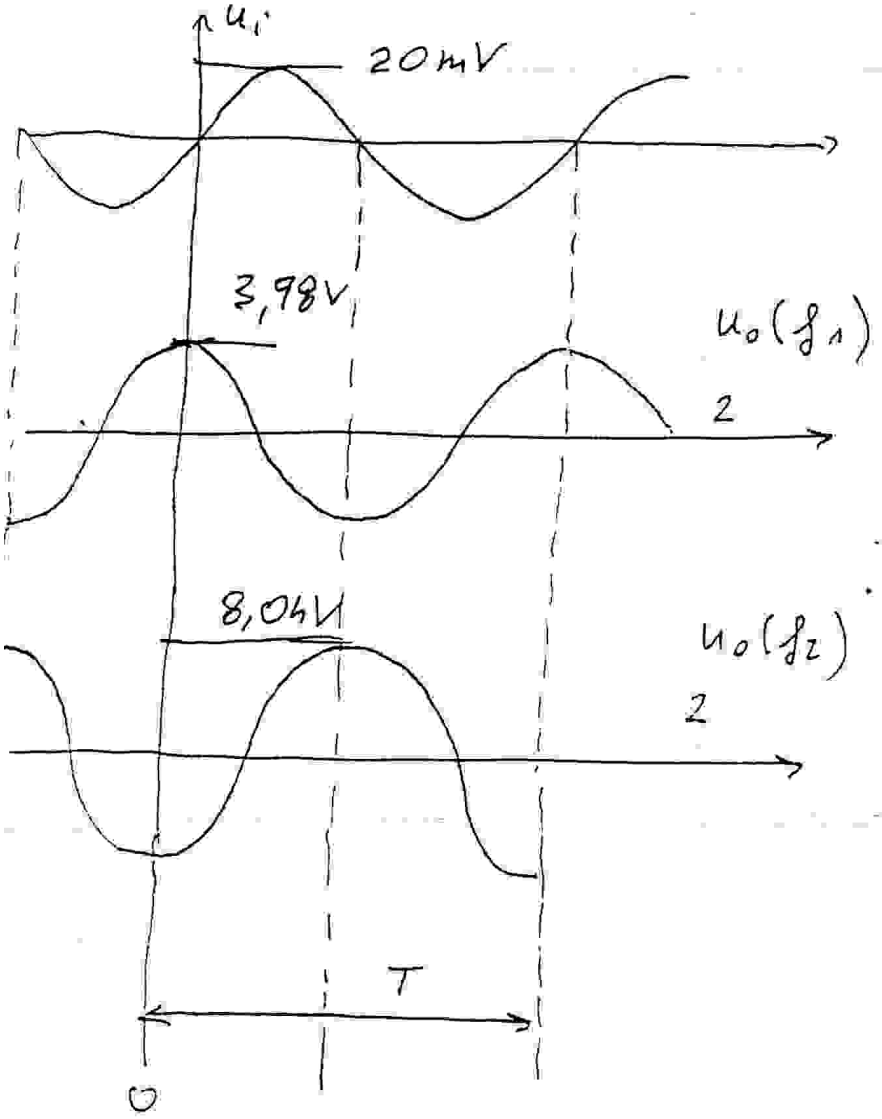

← pretvorba zaved. invert. ojač.

← zaostajanje zaved. invert. ojač.