# Prenos zvoka prek omrežij IP

as. mag. Jože Guna

# Vsebina

- Osnovni pojmi
- VoIP telefonija
- VoIP – prenos zvoka
- VoIP kompresija zvoka – “kodeki”
- Protokolni sklad za prenos medijskega prometa
- Prometna analiza
- VoIP terminalna oprema

# Uvod

- **VoIP – glasovna komunikacija prek protokola IP**
  - **tehnologija omogoča izvajanje glasovnih klicev z uporabo širokopasovne Internetne povezave**
  - **namesto regularne (analogne) telefonske linije**

- **Zakaj?**
  - **VoIP vpliva na cene storitev in zamenjuje distribucijo dodanih vrednosti med ponudniki storitev**

- **Zakaj zdaj?**
  - **resna alternativna možnost za glasovne komunikacije z dodanimi storitvami**
  - **ponudniki storitev in proizvajalci opreme dodajajo VoIP v svoje ponudbe**

# Opredelitev VoIP

- IP telefonija
  - prenos govora, faksov ali podobnih sporočil prek paketnih IP omrežij
- Internetna telefonija
  - je del IP telefonije
  - IP telefonija, kjer je osnovno transportno omrežje javni internet
- Voice-over-IP (VoIP)
  - je del IP telefonije
  - prenosno omrežje zasebno, upravljano in nadzorovano omrežje IP
- Analogno pojmom
  - InternetTV
  - IPTV

# Osnovni pojmi - skica

## IP telefonija (Voice over the Internet)

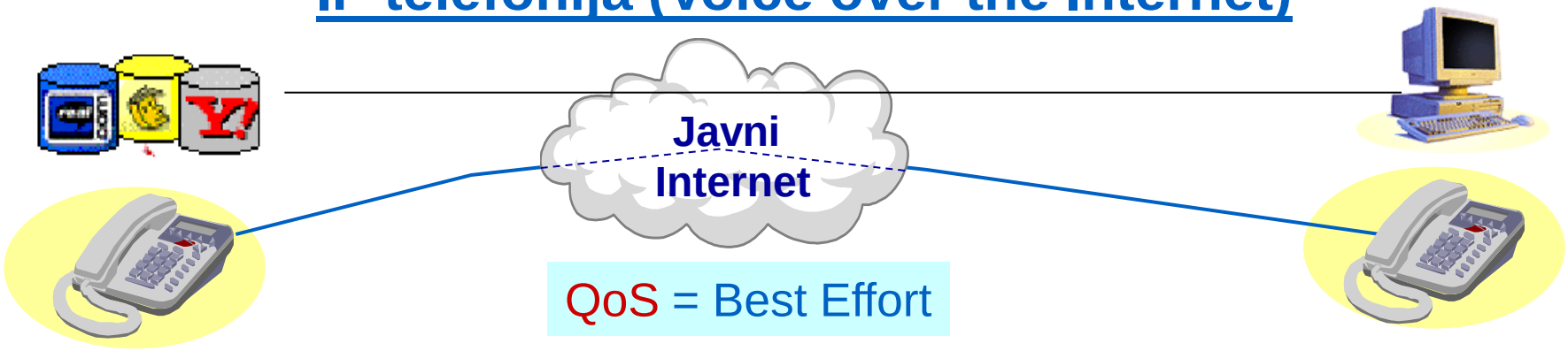


QoS = Best Effort

## Voice over IP

QoS = Kontrola obremenitev in garancije

# Telefonija VoIP

- Nosilno storitev predstavlja protokol IP
- Za govorno komunikacijo je namesto tokokrogovnega uporabljen paketni način prenosa podatkov
- Govorna zveza prek
  - tokokrogovnega omrežja (a)
  - paketnega omrežja (b)

## PRINCIP DELOVANJA

Analogni govorni signal → digitalni podatkovni niz
Oblikovanje IP paketov
Posredovanje paketov v IP omrežje
Končni terminal: združevanje paketov v digitalni niz
Digitalni podatkovni niz → analogni govorni signal

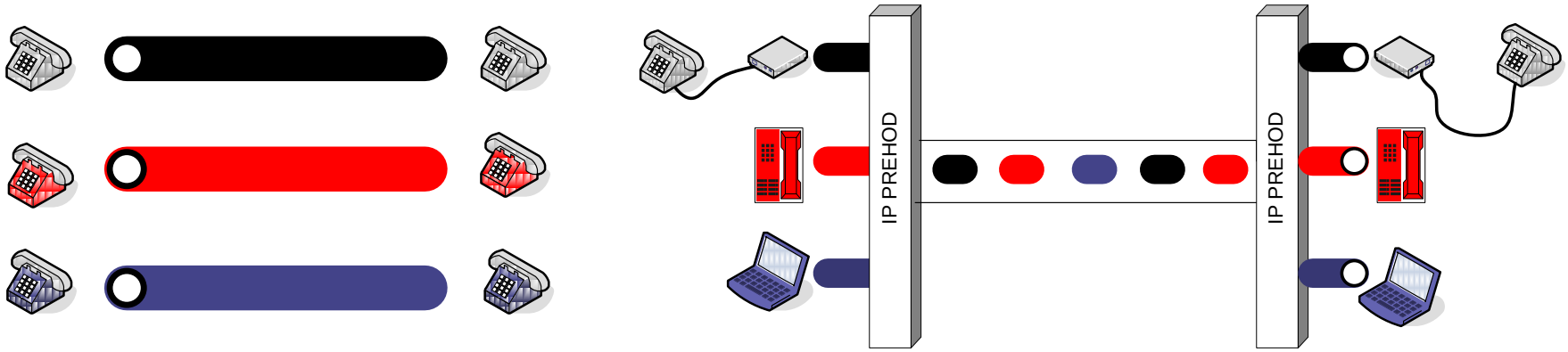


(a) (b)

# Prenos s protokolom IP

- Internetni protokol IP
  - paketni protokol
  - usmerjanje vsakega paketa posebej
  - prenos paketov brez garancij
    - delovanje “best – effort”
    - zakasnitve, izgube
- Podatkovni promet
  - asinhron – lahko zakasnitve
- Glasovni promet
  - sinhron – stroge omejitve za zakasnitve
- IP v osnovi ni primeren za prenos zvoka v realnem času
- VoIP mora:
  - doseči zahteve tradicionalne telefonije
  - ponuditi nove in atraktivne zmogljivosti po nižji ceni

# Arhitektura VoIP – slika

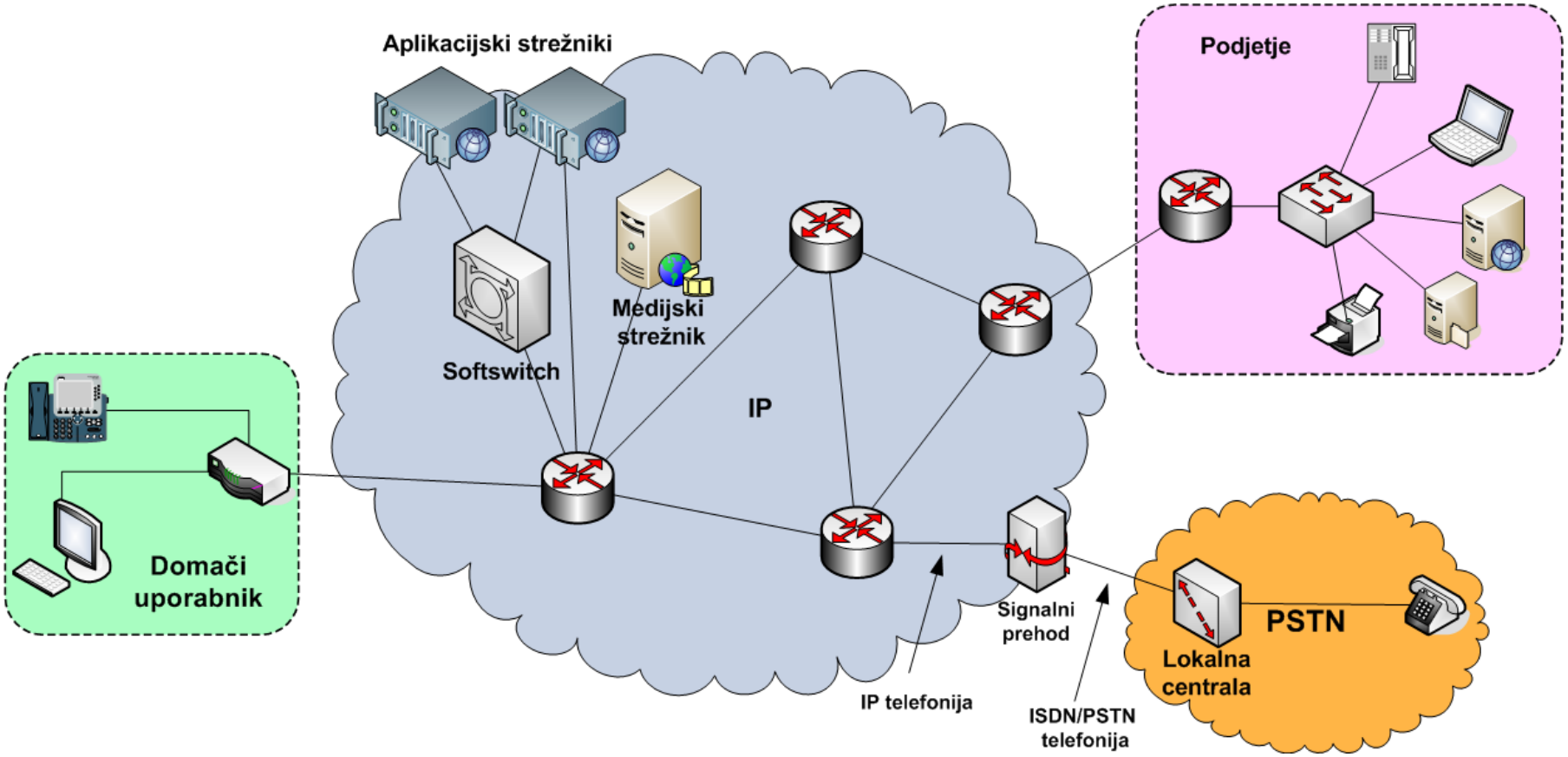

# Protokoli IP telefonije

- Signalizacijski protokoli
  - lociranje klicanega uporabnika
  - vzpostavljanje povezave
    - klicanje
    - prevzem zveze
    - preusmeritev
  - nastavljanje začetnih parametrov zveze
    - tip zveze
    - avdio kodek
    - dodajanje / odstranjevanje sogovorcev...
  - spreminjanje parametrov med zvezo
  - zaključevanje povezave
- SIP
- H.323

# Protokoli IP telefonije

- Protokoli za prenos govora in ostale vsebine (Media Transport Protocols)
  - digitalizacija vsebine
  - kodiranje
  - dekodiranje
  - paketiranje
- Protokoli za upravljanje prehodov
- IP telefonija uporablja tudi standardne internetne protokole
  - TCP
  - UDP
  - RTP
  - RTCP
  - ...

# Glavni VoIP standardi

- Odpri standardi – organizacija IETF
- RFC – Request For Comments
- IETF
  - RFC 3261 SIP
  - RFC 2327 SDP
  - RFC 1889 RTP
  - RFC 768 UDP
  - RFC 791 IP
- ITU-T
  - H.323: Zgodovina, nadomestil ga je SIP
  - G.700: kodiranje zvoka
    - G.711: 64 kb/s PCM
    - Ostali kodeki, nižje hitrosti (lower rates?)
- IEEE 802.3 Ethernet
- TIA kategorije kablov

# SIP

- Session Initiation Protocol (SIP) je protokol za kontrolo aplikacijskega sloja (signalizacija) za:
  - ustvarjanje,
  - spreminjanje,
  - rušenje …
- … multimedijskih sej za enega ali več sodelujočih.
- SIP je signalizacijski protokol

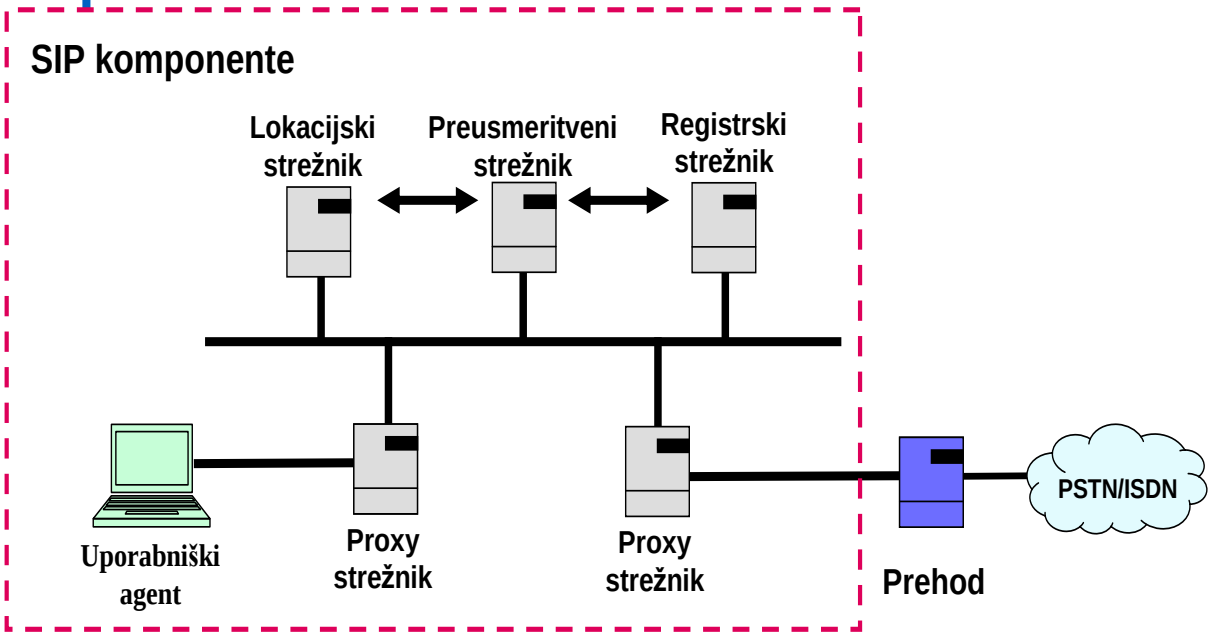

# H.323

- **Osnovne funkcionalnosti H.323**
  - vzpostavljanje in prekinjanje klicev
  - avdio, video ali multimedijske konference

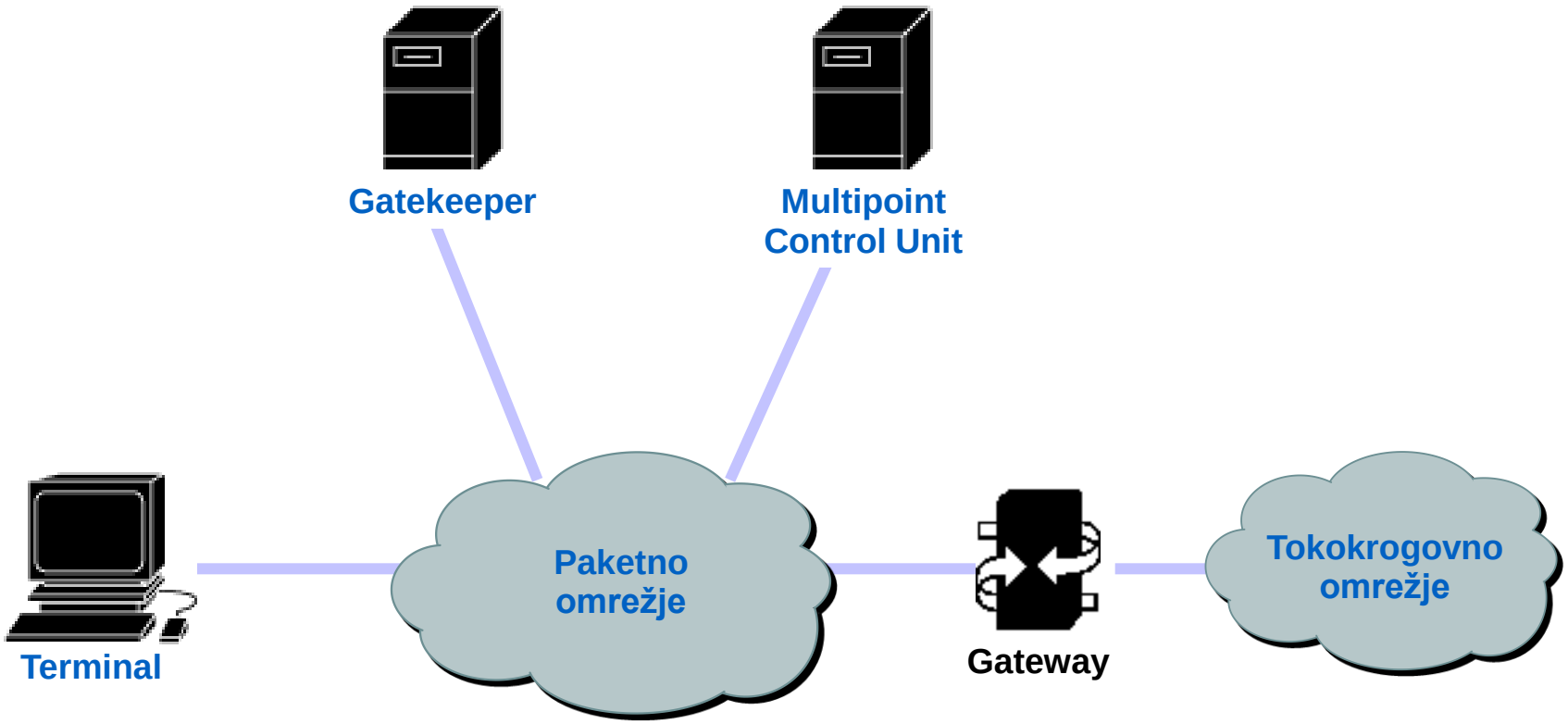

# H.323 vs. SIP

- **Zveza**
  - vzpostavitev
  - vzdrževanje
  - rušenje

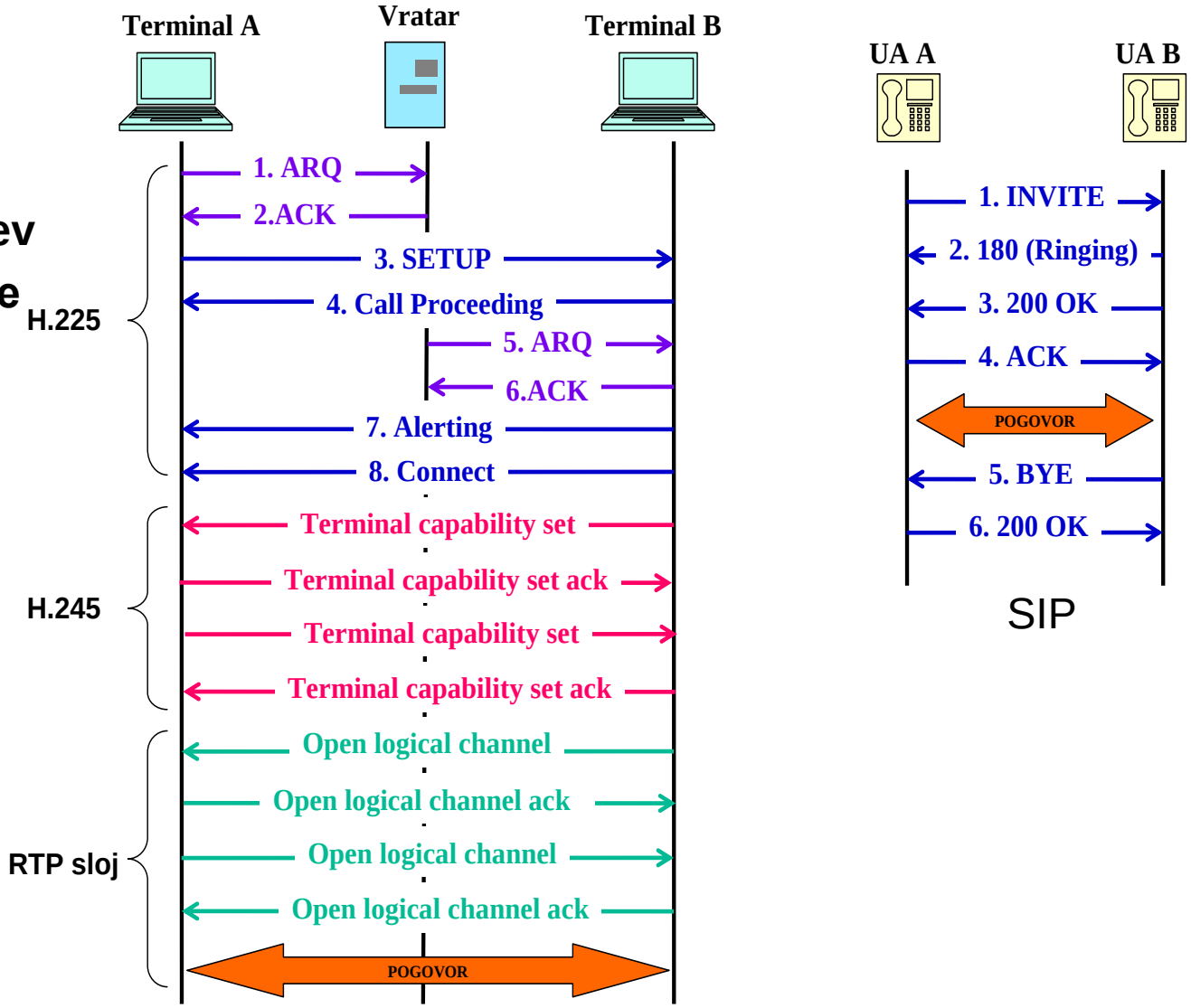

# Prenos medijskega prometa

# Paketizacija govornega signala

- **Analogni signal**

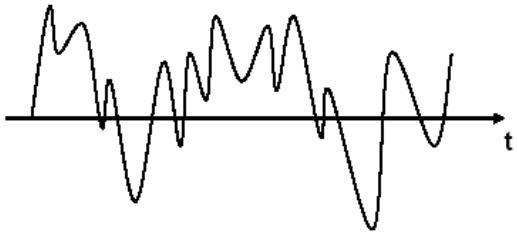


- **Vzorčeni signal**

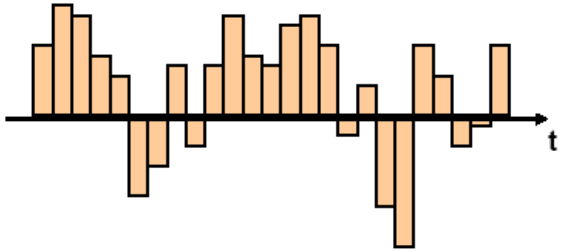


- **Kvantizacija**

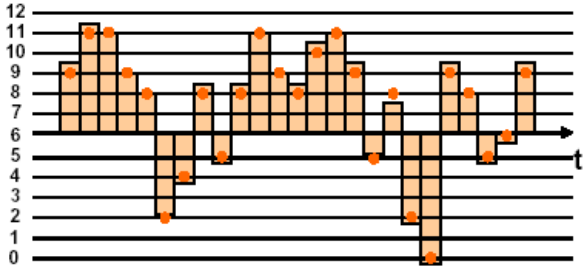


- **Digitaliziran signal**

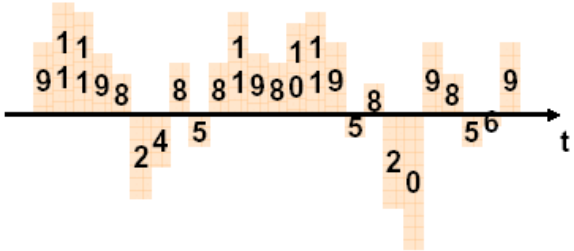


- **Kompresija / paketizacija okvirjev v pakete**

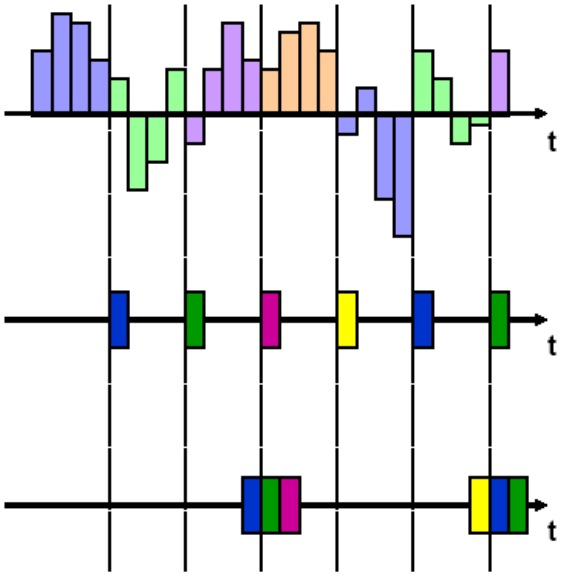

# Protokolni sklad za prenos A/V vsebin

- **Kontrola seje**
  - SIP
  - H.323
  - (RTSP za video vsebine)
- **Prenos podatkov**
  - RTP/RTCP
  - SRTP/SRTCP/ZRTP
  - TCP/UDP

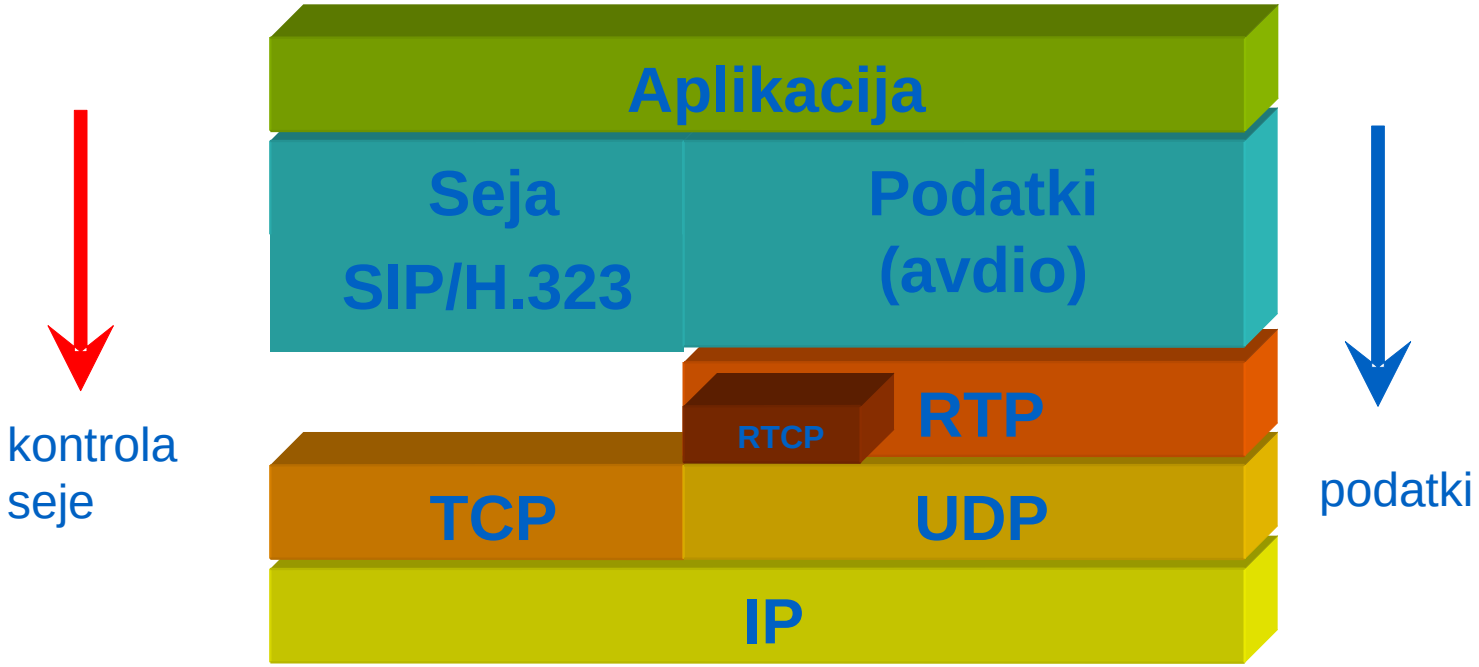

# Avdio “kodeki”

- Kodeki se razlikujejo po
  - potrebni pasovni širini
  - potrebni procesorski moči za kodiranje in dekodiranje

| Kodek | Algoritem | Bitna hitrost |
|---|---|---|
| G.711 | Pulse-Coded Modulation (PCM), μ-Law ali A-Law | 64 kb/s |
| G.721 | Adaptive Differential Pulse Code Modulation (ADPCM) | 32 kb/s |
| G.726 | Razširjen ADPCM | 40, 32, 24 ali 16 kb/s |
| G.728 | Low-Delay Code Excited Linear Prediction (LD-CELP) | 16 kb/s |
| G.729 | Conjugate-Structure Algebraic-Code-Excited Linear Prediction (CS-ACELP) | 8 kb/s |

# Primer: Avdio prek RTP/RTCP

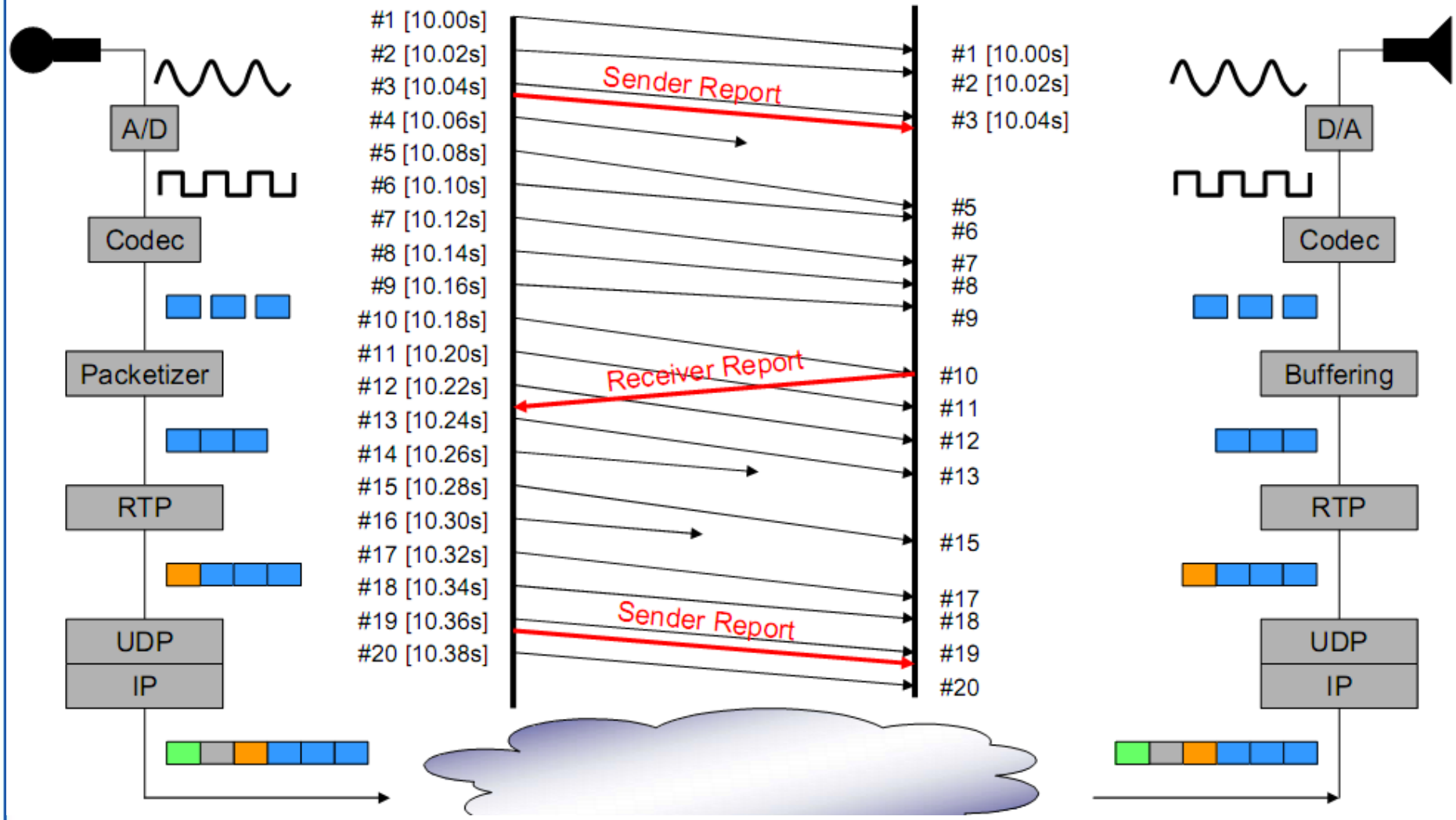

# VoIP kodeki – pasovna širina

- **G.711 - Ethernet**
  - **BW: 64kbit/s**
  - **vzorčenje: 20ms->50 paket/s**
  - **64kbit/s / 50 paket/s = 1280 bit/paket = 160 byte/paket**
  - **režija: Ethernet (18 byte) + IP (20 byte) + UDP (8 byte) + RTP (12 byte) = 58 byte**
  - **skupno: 160 byte/paket + 58 byte/paket = 218 byte/paket**
  - **bruto BW: 218 byte/paket * 50 paket/s = 10900 byte/s = 87.2 kbit/s**
  - **režija: 87.2 kbit/s - 64kbit/s = 23.2 kbit/s**

| Codec Information | | | | Bandwidth Calculations | | | | | |
|---|---|---|---|---|---|---|---|---|---|
| Codec & Bit Rate (Kbps) | Codec Sample Size (Bytes) | Codec Sample Interval (ms) | Mean Opinion Score (MOS) | Voice Payload Size (Bytes) | Voice Payload Size (ms) | Packets Per Second (PPS) | Bandwidth MP or FRF.12 (Kbps) | Bandwidth w/cRTP MP or FRF.12 (Kbps) | Bandwidth Ethernet (Kbps) |
| G.711 (64 Kbps) | 80 Bytes | 10 ms | 4.1 | 160 Bytes | 20 ms | 50 | 82.8 Kbps | 67.6 Kbps | 87.2 Kbps |
| G.729 (8 Kbps) | 10 Bytes | 10 ms | 3.92 | 20 Bytes | 20 ms | 50 | 26.8 Kbps | 11.6 Kbps | 31.2 Kbps |
| G.723.1 (6.3 Kbps) | 24 Bytes | 30 ms | 3.9 | 24 Bytes | 30 ms | 34 | 18.9 Kbps | 8.8 Kbps | 21.9 Kbps |
| G.723.1 (5.3 Kbps) | 20 Bytes | 30 ms | 3.8 | 20 Bytes | 30 ms | 34 | 17.9 Kbps | 7.7 Kbps | 20.8 Kbps |
| G.726 (32 Kbps) | 20 Bytes | 5 ms | 3.85 | 80 Bytes | 20 ms | 50 | 50.8 Kbps | 35.6 Kbps | 55.2 Kbps |
| G.726 (24 Kbps) | 15 Bytes | 5 ms | | 60 Bytes | 20 ms | 50 | 42.8 Kbps | 27.6 Kbps | 47.2 Kbps |
| G.728 (16 Kbps) | 10 Bytes | 5 ms | 3.61 | 60 Bytes | 30 ms | 34 | 28.5 Kbps | 18.4 Kbps | 31.5 Kbps |

Vir: http://www.cisco.com/en/US/tech/tk652/tk698/technologies_tech_note09186a0080094ae2.shtml

# Osnovne značilnosti RTP/RTCP/RTSP

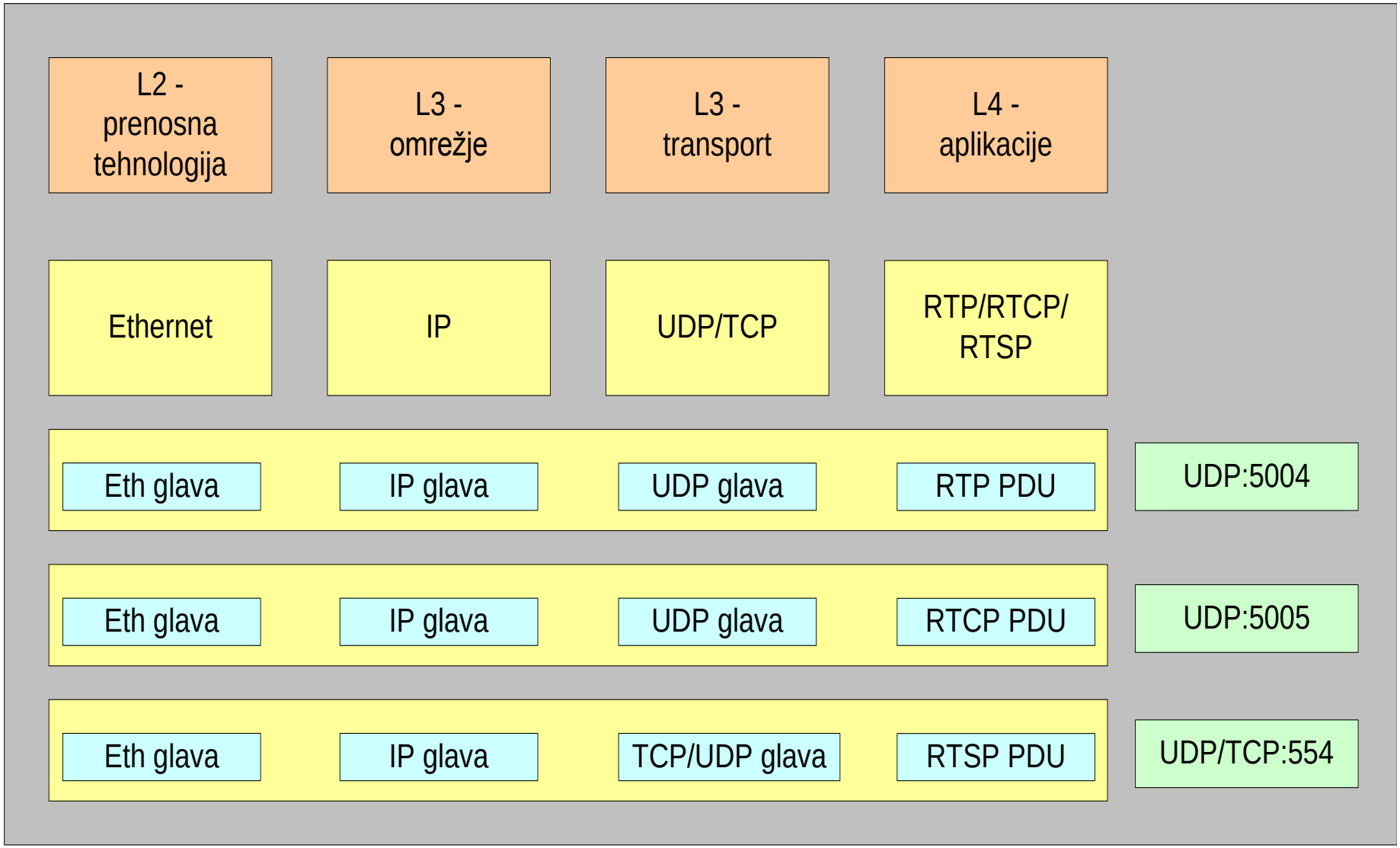

# RTP (Real-time Transport Protocol)

- RFC 3550, RFC 3551
- Namenjen prenosu vsebin v “realnem času”
- Prenos v unicast in multicast načinu
- Protokol RTP zagotavlja storitve
  - časovno žigosanje in rekonstrukcijo
  - detekcijo izgub
  - identifikacijo vsebin
- Polja
  - Verzija – 2
  - Tovor (ang. Payload)
  - Časovni žig (ang. Timestamp)

| MAC header | IP header | UDP header | RTP message |
|---|---|---|---|

| 00 | 01 | 02 | 03 | 04 | 05 | 06 | 07 | 08 | 09 | 10 | 11 | 12 | 13 | 14 | 15 | 16 | 17 | 18 | 19 | 20 | 21 | 22 | 23 | 24 | 25 | 26 | 27 | 28 | 29 | 30 | 31 |
|---|---|---|---|---|---|---|---|---|---|---|---|---|---|---|---|---|---|---|---|---|---|---|---|---|---|---|---|---|---|---|---|
| Ver | | P | X | CC | | | | M | PT | | | | | | | Sequence Number | | | | | | | | | | | | | | | |
| Timestamp | | | | | | | | | | | | | | | | | | | | | | | | | | | | | | | |
| SSRC | | | | | | | | | | | | | | | | | | | | | | | | | | | | | | | |
| CSRC [0..15] ::: | | | | | | | | | | | | | | | | | | | | | | | | | | | | | | | |

# RTCP (RTP Control Protocol)

- RFC 3605, RFC 3611, RFC 3711, RFC 3550
- Komplementaren protokol, ki dopolnjuje protokol RTP
- Udeleženci RTP seje periodično pošiljajo RTCP sporočila za izmenjavo informacij o kvaliteti prenosa in o identiteti udeležencev
- Naloge
  - nadzor kakovosti storitev in prenosa podatkov, informacije lahko koristijo tako oddajniki, sprejemniki ali nadzorni sistemi
  - identifikacija izvorov omogoča enolično globalno označevanje – kanonična imena
  - sinhronizacija med mediji (avdio, video).
  - prilagajanje kontrolnih informacij med udeleženci

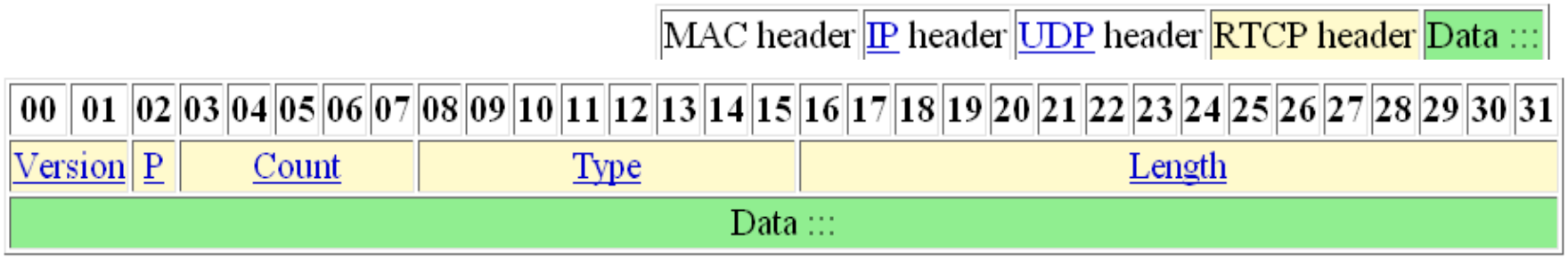

# RTSP (Real Time Streaming Protocol)

- RFC 2326
- Nadzorni protokol namenjen za učinkovito strujanje večpredstavnih vsebin
- Prenos prek transportnih protokolov TCP (tipično) in UDP, privzeta št. komunikacijskih vrat je 554 (8554)
- Strežba vsebin na zahtevo in oddajanje v živo
- Omogoča inicializacijo in VCR funkcionalnosti: pavza, hitro predvajanje naprej in nazaj, absolutno pozicioniranje
- Možno tuneliranje podatkov (RTP) v okviru protokola RTSP
- Komplementaren po funkcionalnosti H.323
- Razvili: RealNetworks, Netscape Communicatios, Columbia University

| | | | |
|---|---|---|---|
| MAC header | IP header | TCP header | RTSP message |
| MAC header | IP header | UDP header | RTSP message |

# Analiza prometa – H.323 - signalizacija

h323test1.pcap - Wireshark

File Edit View Go Capture Analyze Statistics Help

Filter: (ip.addr eq 192.168.99.23 and ip.addr eq 192.1 Expression... Clear Apply

| No. | Time | Source | Destination | Protocol | Info |
|---|---|---|---|---|---|
| 5 | 4.100470 | 192.168.99.23 | 192.168.99.2 | TCP | 1038 > 1720 [SYN] Seq=0 Len=0 MSS=1460 WS=0 TSV=5742188 TSER=0 |
| 6 | 4.102517 | 192.168.99.2 | 192.168.99.23 | TCP | 1720 > 1038 [SYN, ACK] Seq=0 Ack=1 Win=8192 Len=0 MSS=1460 WS=0 TSV=37199255 TSER=57 |
| 7 | 4.103758 | 192.168.99.23 | 192.168.99.2 | TCP | 1038 > 1720 [ACK] Seq=1 Ack=1 Win=8192 Len=0 |
| 8 | 4.235365 | 192.168.99.23 | 192.168.99.2 | H.225.0 | CS: setup openLogicalChannel |
| 9 | 4.236847 | 192.168.99.2 | 192.168.99.23 | TCP | 1720 > 1038 [ACK] Seq=1 Ack=334 Win=7863 Len=0 TSV=37199256 TSER=5742188 |
| 10 | 4.363940 | 192.168.99.2 | 192.168.99.23 | H.225.0 | CS: setupAcknowledge |
| 11 | 4.369757 | 192.168.99.2 | 192.168.99.23 | H.225.0 | CS: progress openLogicalChannel |
| 13 | 4.430233 | 192.168.99.23 | 192.168.99.2 | TCP | 1038 > 1720 [ACK] Seq=334 Ack=179 Win=8067 Len=0 |
| 91 | 6.697797 | 192.168.99.23 | 192.168.99.2 | H.225.0 | CS: information |
| 96 | 6.816400 | 192.168.99.2 | 192.168.99.23 | TCP | 1720 > 1038 [ACK] Seq=179 Ack=386 Win=8192 Len=0 TSV=37199261 TSER=5742188 |
| 343 | 13.809884 | 192.168.99.23 | 192.168.99.2 | H.225.0 | CS: releaseComplete |
| 344 | 13.811030 | 192.168.99.2 | 192.168.99.23 | TCP | 1720 > 1038 [ACK] Seq=179 Ack=440 Win=8142 Len=0 TSV=37199275 TSER=5742188 |
| 345 | 13.815489 | 192.168.99.2 | 192.168.99.23 | TCP | 1720 > 1038 [FIN, ACK] Seq=179 Ack=440 Win=8192 Len=0 TSV=37199275 TSER=5742188 |
| 346 | 13.816605 | 192.168.99.23 | 192.168.99.2 | TCP | 1038 > 1720 [ACK] Seq=440 Ack=180 Win=8192 Len=0 |
| 347 | 13.822151 | 192.168.99.23 | 192.168.99.2 | TCP | 1038 > 1720 [FIN, ACK] Seq=440 Ack=180 Win=8192 Len=0 |
| 348 | 13.822748 | 192.168.99.2 | 192.168.99.23 | TCP | 1720 > 1038 [ACK] Seq=180 Ack=441 Win=8192 Len=0 TSV=37199275 TSER=5742188 |

```
⊞ Frame 8 (387 bytes on wire, 387 bytes captured)
⊞ Ethernet II, Src: Iskratel_50:09:60 (00:d0:50:50:09:60), Dst: Iskratel_00:4f:8f (00:d0:50:00:4f:8f)
⊞ Internet Protocol, Src: 192.168.99.23 (192.168.99.23), Dst: 192.168.99.2 (192.168.99.2)
⊞ Transmission Control Protocol, Src Port: 1038 (1038), Dst Port: 1720 (1720), Seq: 1, Ack: 1, Len: 333
⊞ TPKT, Version: 3, Length: 333
⊞ Q.931
⊟ H.225.0 CS
  ⊟ H323_UserInformation
    ⊟ h323-uu-pdu
      ⊟ h323-message-body: setup (0)
        ⊟ setup
            protocolIdentifier: 0.0.8.2250.0.4 (itu-t(0) recommendation(0) h(8) h225-0(2250) version(0) 4)
          ⊞ sourceAddress: 2 items
          ⊞ sourceInfo
          ⊞ destCallSignalAddress: ipAddress (0)
            0... .... activeMC: False
            conferenceID: 0058791b-3f33-0a1f-0ca8-33f069ee8f1d
          ⊞ conferenceGoal: create (0)
          ⊞ callType: pointToPoint (0)
          ⊞ sourceCallSignalAddress: ipAddress (0)
          ⊟ callIdentifier
              guid: 0058791b-3f33-0a1f-0ca7-33f069ee8f1d
          ⊟ fastStart: 4 items
            ⊟ Item 0
                Item: 25 octets
              ⊟ openLogicalChannel
                  forwardLogicalChannelNumber: 1
                ⊟ forwardLogicalChannelParameters
                  ⊟ dataType: audioData (3)
                    ⊞ audioData: g711Alaw64k (1)
                  ⊞ multiplexParameters: h2250LogicalChannelParameters (3)
            ⊞ Item 1
```

```
00b0  ee 8f 1d 71 04 19 00 00  00 0c 20 1d 80 11 14 00   ...q.... .. .....
00c0  01 00 c0 a8 63 17 4a 38  00 c0 a8 63 17 4a 39 1d   ....c.J8 ...c.J9.
00d0  40 01 42 06 04 01 00 4c  20 1d 80 11 14 00 01 00   @.B....L .......
00e0  c0 a8 63 17 4a 38 00 c0  a8 63 17 4a 39 19 00 00   ..c.J8.. .c.J9...
00f0  01 0c 60 1d 80 11 14 00  01 00 c0 a8 63 17 4a 38   .. ..... ....c.J8
```

h245.AudioCapability (h245.audioData), 3 bytes | P: 351 D: 16 M: 0

# Analiza prometa H.323/RTP – podatki

h323test1.pcap - Wireshark

File Edit View Go Capture Analyze Statistics Help

Filter: Expression... Clear Apply

| No. | Time | Source | Destination | Protocol | Info |
|---|---|---|---|---|---|
| 5 | 4.100470 | 192.168.99.23 | 192.168.99.2 | TCP | 1038 > 1720 [SYN] Seq=0 Len=0 MSS=1460 WS=0 TSV=5742188 TSER=0 |
| 6 | 4.102517 | 192.168.99.2 | 192.168.99.23 | TCP | 1720 > 1038 [SYN, ACK] Seq=0 Ack=1 Win=8192 Len=0 MSS=1460 WS=0 TSV=37199255 TSER=57 |
| 7 | 4.103758 | 192.168.99.23 | 192.168.99.2 | TCP | 1038 > 1720 [ACK] Seq=1 Ack=1 Win=8192 Len=0 |
| 8 | 4.235365 | 192.168.99.23 | 192.168.99.2 | H.225.0 | CS: setup OpenLogicalChannel |
| 9 | 4.236847 | 192.168.99.2 | 192.168.99.23 | TCP | 1720 > 1038 [ACK] Seq=1 Ack=334 Win=7863 Len=0 TSV=37199256 TSER=5742188 |
| 10 | 4.363940 | 192.168.99.2 | 192.168.99.23 | H.225.0 | CS: setupAcknowledge |
| 11 | 4.369757 | 192.168.99.2 | 192.168.99.23 | H.225.0 | CS: progress OpenLogicalChannel |
| 12 | 4.404744 | 192.168.99.2 | 192.168.99.23 | RTP | PT=ITU-T G.711 PCMA, SSRC=0xC7AB4A0, Seq=0, Time=200, Mark |
| 13 | 4.430233 | 192.168.99.23 | 192.168.99.2 | TCP | 1038 > 1720 [ACK] Seq=334 Ack=179 Win=8067 Len=0 |
| 14 | 4.436666 | 192.168.99.2 | 192.168.99.23 | RTP | PT=ITU-T G.711 PCMA, SSRC=0xC7AB4A0, Seq=1, Time=440 |
| 15 | 4.468615 | 192.168.99.2 | 192.168.99.23 | RTP | PT=ITU-T G.711 PCMA, SSRC=0xC7AB4A0, Seq=2, Time=680 |
| 16 | 4.500622 | 192.168.99.2 | 192.168.99.23 | RTP | PT=ITU-T G.711 PCMA, SSRC=0xC7AB4A0, Seq=3, Time=920 |
| 17 | 4.532613 | 192.168.99.2 | 192.168.99.23 | RTP | PT=ITU-T G.711 PCMA, SSRC=0xC7AB4A0, Seq=4, Time=1160 |
| 18 | 4.564612 | 192.168.99.2 | 192.168.99.23 | RTP | PT=ITU-T G.711 PCMA, SSRC=0xC7AB4A0, Seq=5, Time=1400 |
| 19 | 4.580658 | 192.168.99.2 | 192.168.99.23 | RTP | PT=ITU-T G.711 PCMA, SSRC=0xC7AB4A0, Seq=6, Time=1640 |
| 20 | 4.612629 | 192.168.99.2 | 192.168.99.23 | RTP | PT=ITU-T G.711 PCMA, SSRC=0xC7AB4A0, Seq=7, Time=1880 |

```
⊞ Frame 17 (294 bytes on wire, 294 bytes captured)
⊞ Ethernet II, Src: Iskratel_00:4f:8f (00:d0:50:00:4f:8f), Dst: Iskratel_50:09:60 (00:d0:50:50:09:60)
⊞ Internet Protocol, Src: 192.168.99.2 (192.168.99.2), Dst: 192.168.99.23 (192.168.99.23)
⊟ User Datagram Protocol, Src Port: 17948 (17948), Dst Port: 19000 (19000)
    Source port: 17948 (17948)
    Destination port: 19000 (19000)
    Length: 260
  ⊞ Checksum: 0x0000 (none)
⊟ Real-Time Transport Protocol
  ⊟ [Stream setup by H245 (frame 11)]
      [Setup frame: 11]
      [Setup Method: H245]
    10.. .... = Version: RFC 1889 Version (2)
    ..0. .... = Padding: False
    ...0 .... = Extension: False
    .... 0000 = Contributing source identifiers count: 0
    0... .... = Marker: False
    Payload type: ITU-T G.711 PCMA (8)
    Sequence number: 4
    [Extended sequence number: 65540]
    Timestamp: 1160
    Synchronization Source identifier: 0x0c7ab4a0 (209368224)
    Payload: B8A5BABEB183C106363F3A2538320B11938ABDB8A5BABFB7...
```

```
0020  63 17 46 1c 4a 38 01 04  00 00 80 08 00 04 00 00   c.F.J8.. ....
0030  04 88 0c 7a b4 a0 b8 a5  ba be b1 83 c1 06 36 3f   ...z.... ......6?
0040  3a 25 38 32 0b 11 93 8a  bd b8 a5 ba bf b7 87 71   :%82.... .......q
0050  02 31 3e 3a 3a 39 33 0e  6c 9b b4 bc bb a5 bb bc   .1>::93. l......
0060  b4 9b 6c 0e 33 39 3a 3a  3e 31 02 71 87 b7 bf ba   ..l.39:: >1.q....
0070  a5 b8 bd 8a 93 11 0b 32  38 25 3a 3f 36 06 c1 83   .......2 8%:?6...
0080  b1 be ba a5 b8 b3 89 eb  1e 35 3d 3b 25 3b 3c 34   ........ .5=;%;<4
0090  05 e1 8c b0 b9 ba ba b9  b0 8d fb 04 37 3f 3b 25   ........ ....7?;%
00a0  3b 3d 35 1c 94 88 b2 b8  a5 ba be b6 80 55 00 36   ;=5..... .....U.6
00b0  3e 3a 25 38 32 08 14 9c  b5 bd bb a5 bb bf b7 84   >:%82... ........
00c0  7b 0d 30 39 3a 3a 39 30  0c 61 85 b4 bc bb a5 bb   {.09::90 .a......
00d0  bd b5 9e 6b 09 33 38 25  3a 3e 31 03 41 86 b6 bf   ...k.38% :>1.A...
00e0  ba a5 b8 b2 8b 91 13 0a  3d 38 25 3a 3f 37 07 f1   ........ =8%:?7..
00f0  82 b1 be ba ba b9 b3 8e  ec 1b 34 3c 3b 25 3b 3c   ........ ..4<;%;<
0100  34 1b ec 8e b3 b9 ba ba  be b1 82 f1 07 37 3f 3a   4....... .....7?:
0110  25 38 3d 0a 13 91 8b b2  b8 a5 ba bf b6 86 41 03   %8=..... ......A.
```

Payload type (rtp.p_type), 1 byte | P: 351 D: 351 M: 0

# Analiza prometa H.323 – BW

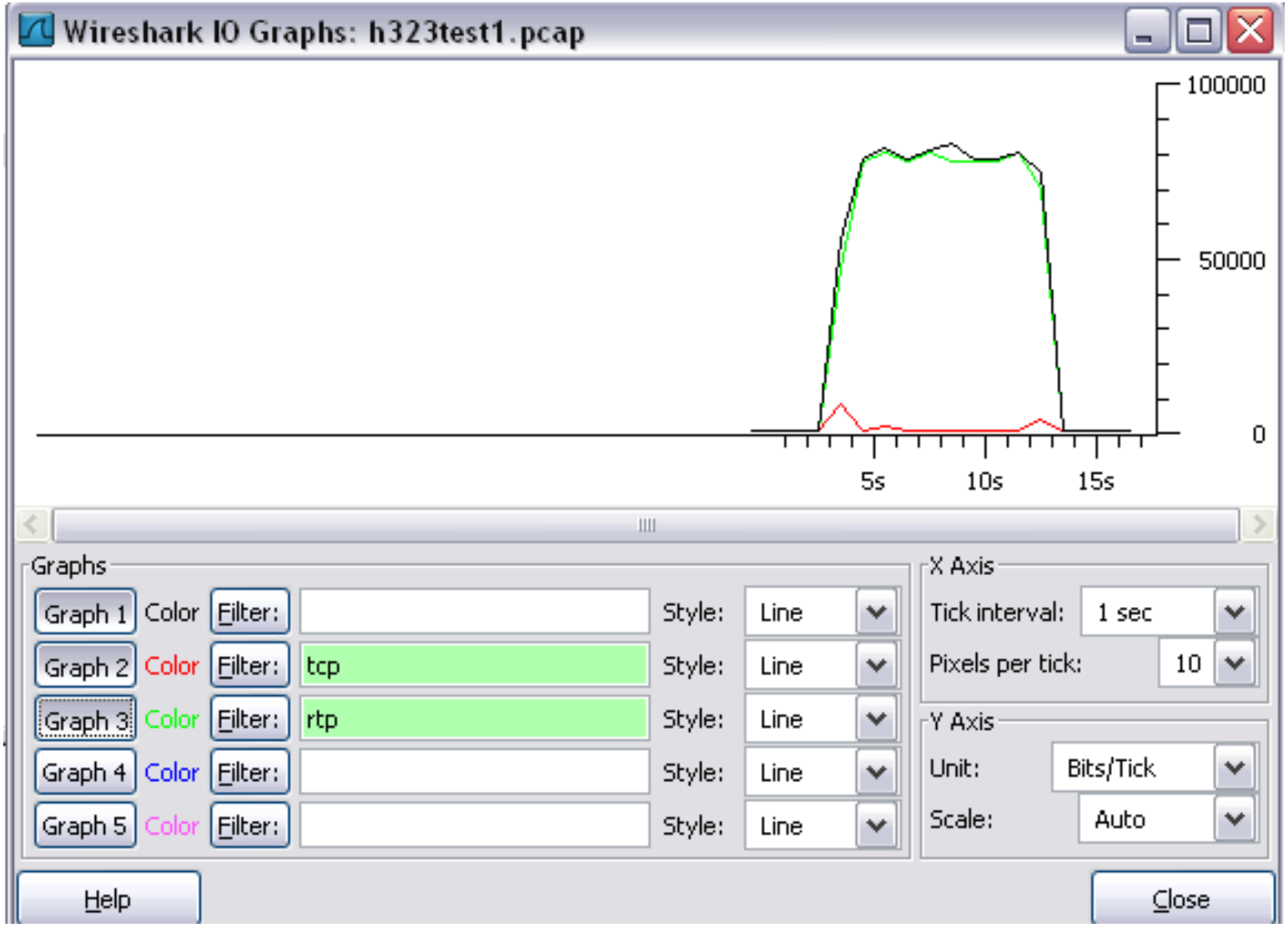

# Analiza video prometa pri strujanju – RTSP

(Untitled) - Ethereal

File Edit View Go Capture Analyze Statistics Help

Filter: ip.addr == 193.2.90.101 | Expression... | Clear | Apply

| No. | Time | Source | Destination | Protocol | Length | Info |
|---|---|---|---|---|---|---|
| 47 | 4.999376 | 10.0.3.130 | 193.2.90.101 | TCP | 62 | 3173 > 554 [SYN] Seq=0 Ack=0 Win=65535 Len=0 MSS=1460 |
| 49 | 5.000253 | 193.2.90.101 | 10.0.3.130 | TCP | 62 | 554 > 3173 [SYN, ACK] Seq=0 Ack=1 Win=16384 Len=0 MSS=14 |
| 50 | 5.000464 | 10.0.3.130 | 193.2.90.101 | TCP | 54 | 3173 > 554 [ACK] Seq=1 Ack=1 Win=65535 Len=0 |
| 51 | 5.003124 | 10.0.3.130 | 193.2.90.101 | RTSP | 485 | DESCRIBE rtsp://193.2.90.101/harry.wmv RTSP/1.0 |
| 52 | 5.036928 | 193.2.90.101 | 10.0.3.130 | RTSP/S | 1514 | Reply: RTSP/1.0 200 OK, with session description |
| 53 | 5.037141 | 193.2.90.101 | 10.0.3.130 | RTSP | 1514 | Continuation |
| 54 | 5.037284 | 10.0.3.130 | 193.2.90.101 | TCP | 54 | 3173 > 554 [ACK] Seq=432 Ack=2921 Win=65535 Len=0 |
| 55 | 5.037471 | 193.2.90.101 | 10.0.3.130 | RTSP | 89 | Continuation |
| 57 | 5.173464 | 10.0.3.130 | 193.2.90.101 | TCP | 54 | 3173 > 554 [ACK] Seq=432 Ack=2956 Win=65500 Len=0 |
| 58 | 5.229027 | 10.0.3.130 | 193.2.90.101 | RTSP | 414 | SETUP rtsp://193.2.90.101/harry.wmv/rtx RTSP/1.0 |
| 59 | 5.235884 | 193.2.90.101 | 10.0.3.130 | RTSP | 628 | Reply: RTSP/1.0 200 OK |
| 60 | 5.237333 | 10.0.3.130 | 193.2.90.101 | RTSP | 482 | SET_PARAMETER rtsp://193.2.90.101/harry.wmv RTSP/1.0 |
| 61 | 5.237958 | 193.2.90.101 | 10.0.3.130 | RTP | 1512 | Payload type=Unknown (96), SSRC=2407692578, Seq=8017, Ti |
| 62 | 5.238135 | 193.2.90.101 | 10.0.3.130 | RTP | 1513 | Payload type=Unknown (96), SSRC=2407692578, Seq=8018, Ti |
| 63 | 5.238196 | 193.2.90.101 | 10.0.3.130 | RTP | 1514 | Payload type=Unknown (96), SSRC=2407692578, Seq=8019, Ti |
| 64 | 5.238271 | 193.2.90.101 | 10.0.3.130 | RTSP | 301 | Reply: RTSP/1.0 200 OK |
| 65 | 5.374636 | 10.0.3.130 | 193.2.90.101 | TCP | 54 | 3173 > 554 [ACK] Seq=1220 Ack=3777 Win=64679 Len=0 |
| 66 | 5.499908 | 10.0.3.130 | 193.2.90.101 | RTSP | 441 | SETUP rtsp://193.2.90.101/harry.wmv/audio RTSP/1.0 |
| 67 | 5.502250 | 193.2.90.101 | 10.0.3.130 | RTSP | 635 | Reply: RTSP/1.0 200 OK |
| 68 | 5.502516 | 10.0.3.130 | 193.2.90.101 | RTSP | 441 | SETUP rtsp://193.2.90.101/harry.wmv/video RTSP/1.0 |
| 69 | 5.504099 | 193.2.90.101 | 10.0.3.130 | RTSP | 635 | Reply: RTSP/1.0 200 OK |
| 70 | 5.676389 | 10.0.3.130 | 193.2.90.101 | TCP | 54 | 3173 > 554 [ACK] Seq=1994 Ack=4939 Win=65535 Len=0 |
| 117 | 8.498841 | 10.0.3.130 | 193.2.90.101 | RTSP | 468 | PLAY rtsp://193.2.90.101/harry.wmv RTSP/1.0 |
| 118 | 8.502907 | 193.2.90.101 | 10.0.3.130 | RTSP | 820 | Reply: RTSP/1.0 200 OK |
| 119 | 8.506884 | 10.0.3.130 | 193.2.90.101 | RTSP | 647 | SET_PARAMETER rtsp://193.2.90.101/harry.wmv RTSP/1.0 |
| 120 | 8.507459 | 193.2.90.101 | 10.0.3.130 | RTSP | 189 | Reply: RTSP/1.0 200 OK |
| 121 | 8.548514 | 193.2.90.101 | 10.0.3.130 | RTP | 1426 | Payload type=Unknown (96), SSRC=12025892, Seq=61551, Time |
| 122 | 8.548733 | 193.2.90.101 | 10.0.3.130 | RTP | 1426 | Payload type=Unknown (96), SSRC=12025892, Seq=61552, Time |
| 123 | 8.548785 | 193.2.90.101 | 10.0.3.130 | RTP | 1403 | Payload type=Unknown (96), SSRC=12025892, Seq=61553, Time |

```
▷ Frame 51 (485 bytes on wire, 485 bytes captured)
▷ Ethernet II, Src: 00:03:47:fe:6e:e6, Dst: 00:16:46:b6:a8:40
▷ Internet Protocol, Src Addr: 10.0.3.130 (10.0.3.130), Dst Addr: 193.2.90.101 (193.2.90.101)
▷ Transmission Control Protocol, Src Port: 3173 (3173), Dst Port: 554 (554), Seq: 1, Ack: 1, Len: 431
▽ Real Time Streaming Protocol
  ▷ DESCRIBE rtsp://193.2.90.101/harry.wmv RTSP/1.0\r\n
    User-Agent: WMPlayer/10.0.0.364 guid/3300AD50-2C39-46C0-AE0A-500F44282979\r\n
    Accept: application/sdp\r\n
    Accept-Charset: UTF-8, *;q=0.1\r\n
    X-Accept-Authentication: Negotiate, NTLM, Digest, Basic\r\n
    Accept-Language: sl-SI, *;q=0.1\r\n
    CSeq: 1\r\n
    Supported: com.microsoft.wm.srvppair, com.microsoft.wm.sswitch, com.microsoft.wm.eosmsg, com.microsoft.wm.predstrm, com.micr
    \r\n
```

Real Time Streaming Protocol (rtsp), 431 bytes | P: 1697 D: 1335 M: 0

# Analiza prometa RTSP seje

amino103-a_mpg-ociscen.trace - Ethereal

File Edit View Go Capture Analyze Statistics Help

Filter: (ip.addr eq 10.0.5.20 and ip.addr eq 10.0.1.78) an | Expression... | Clear | Apply

Čas

| | Time | Source | Destination | Protocol | Length | Info |
|---|---|---|---|---|---|---|
| 1 | 0.000000 | 10.0.5.20 | 10.0.1.78 | TCP | 74 | 2059 > 554 [SYN] Seq=0 Ack=0 Win= |
| 2 | 0.000621 | 10.0.1.78 | 10.0.5.20 | TCP | 74 | 554 > 2059 [SYN, ACK] Seq=0 Ack=1 |
| 3 | 0.000942 | 10.0.5.20 | 10.0.1.78 | TCP | 66 | 2059 > 554 [ACK] Seq=1 Ack=1 Win= |
| 4 | 0.102013 | 10.0.5.20 | 10.0.1.78 | RTSP | 255 | SETUP rtsp://10.0.1.78/Video/a.mp |
| 5 | 0.102148 | 10.0.1.78 | 10.0.5.20 | TCP | 66 | 554 > 2059 [ACK] Seq=1 Ack=190 Wi |
| 6 | 0.110499 | 10.0.1.78 | 10.0.5.20 | RTSP/S | 496 | Reply: RTSP/1.0 200 OK, with sess |
| 7 | 0.110811 | 10.0.5.20 | 10.0.1.78 | TCP | 66 | 2059 > 554 [ACK] Seq=190 Ack=431 |
| 8 | 0.209260 | 10.0.5.20 | 10.0.1.78 | RTSP | 170 | PLAY rtsp://10.0.1.78/Video/a.mpg |
| 9 | 0.222411 | 10.0.1.78 | 10.0.5.20 | RTSP | 241 | Reply: RTSP/1.0 200 OK |
| 10 | 0.222725 | 10.0.5.20 | 10.0.1.78 | TCP | 66 | 2059 > 554 [ACK] Seq=294 Ack=606 |
| 6338 | 15.424355 | 10.0.5.20 | 10.0.1.78 | RTSP | 150 | GET_PARAMETER rtsp://10.0.1.78/Vi |
| 6342 | 15.431080 | 10.0.1.78 | 10.0.5.20 | RTSP | 163 | Reply: RTSP/1.0 200 OK |
| 6343 | 15.431373 | 10.0.5.20 | 10.0.1.78 | TCP | 66 | 2059 > 554 [ACK] Seq=378 Ack=703 |
| 18899 | 45.424179 | 10.0.5.20 | 10.0.1.78 | RTSP | 150 | GET_PARAMETER rtsp://10.0.1.78/Vi |
| 18903 | 45.431506 | 10.0.1.78 | 10.0.5.20 | RTSP | 163 | Reply: RTSP/1.0 200 OK |
| 18904 | 45.431774 | 10.0.5.20 | 10.0.1.78 | TCP | 66 | 2059 > 554 [ACK] Seq=462 Ack=800 |
| 18970 | 50.810103 | 10.0.5.20 | 10.0.1.78 | RTSP | 145 | TEARDOWN rtsp://10.0.1.78/Video/a |
| 18971 | 50.817397 | 10.0.1.78 | 10.0.5.20 | RTSP | 132 | Reply: RTSP/1.0 200 OK |
| 18972 | 50.817711 | 10.0.5.20 | 10.0.1.78 | TCP | 66 | 2059 > 554 [ACK] Seq=541 Ack=866 |
| 18973 | 50.983272 | 10.0.5.20 | 10.0.1.78 | TCP | 66 | 2059 > 554 [FIN, ACK] Seq=541 Ack |
| 18974 | 50.983433 | 10.0.1.78 | 10.0.5.20 | TCP | 66 | 554 > 2059 [RST, ACK] Seq=866 Ack |

▹ Frame 1 (74 bytes on wire, 74 bytes captured)
▹ Ethernet II, Src: 00:02:02:00:33:8b, Dst: 00:30:48:84:dc:5a
▹ Internet Protocol, Src Addr: 10.0.5.20 (10.0.5.20), Dst Addr: 10.0.1.78 (10.0.1.78)
▹ Transmission Control Protocol, Src Port: 2059 (2059), Dst Port: 554 (554), Seq: 0, Ack: 0, Len: 0

```
0000  00 30 48 84 dc 5a 00 02  02 00 33 8b 08 00 45 00   .0H..Z.. ..3...E.
0010  00 3c 89 8d 40 00 40 06  96 cd 0a 00 05 14 0a 00   .<..@.@. ........
0020  01 4e 08 0b 02 2a b0 4e  08 32 00 00 00 00 a0 02   .N...*.N .2......
0030  16 d0 d2 60 00 00 02 04  05 b4 04 02 08 0a 00 00   ... .... ........
```

File: amino103-a_mpg-ociscen.trace 25 MB 00:00:50 | P: 18974 D: 21 M: 0

Vzpostavitev TCP seje (3-way handshake, 3 paketi)

RTSP: SETUP

RTSP: PLAY

RTSP: GET_PARAMETER

RTSP: GET_PARAMETER

RTSP: TEARDOWN

Rušenje TCP seje (2 paketa)

# Prometne značilnosti

- **Protokolna hierarhija**

| Protocol | % Packets | Packets | Bytes | Mbit/s | End Packets | End Bytes | End Mbit/s |
|---|---|---|---|---|---|---|---|
| Frame | 100,00% | 18974 | 26120041 | 4,099 | 0 | 0 | 0,000 |
| Ethernet | 100,00% | 18974 | 26120041 | 4,099 | 0 | 0 | 0,000 |
| Internet Protocol | 100,00% | 18974 | 26120041 | 4,099 | 0 | 0 | 0,000 |
| Transmission Control Protocol | 0,11% | 21 | 2807 | 0,000 | 11 | 742 | 0,000 |
| Real Time Streaming Protocol | 0,05% | 10 | 2065 | 0,000 | 9 | 1569 | 0,000 |
| Session Description Protocol | 0,01% | 1 | 496 | 0,000 | 1 | 496 | 0,000 |
| User Datagram Protocol | 99,89% | 18953 | 26117234 | 4,098 | 0 | 0 | 0,000 |
| Data | 99,89% | 18953 | 26117234 | 4,098 | 18953 | 26117234 | 4,098 |

- **Primerjava količine prometa (RTSP, UDP)**

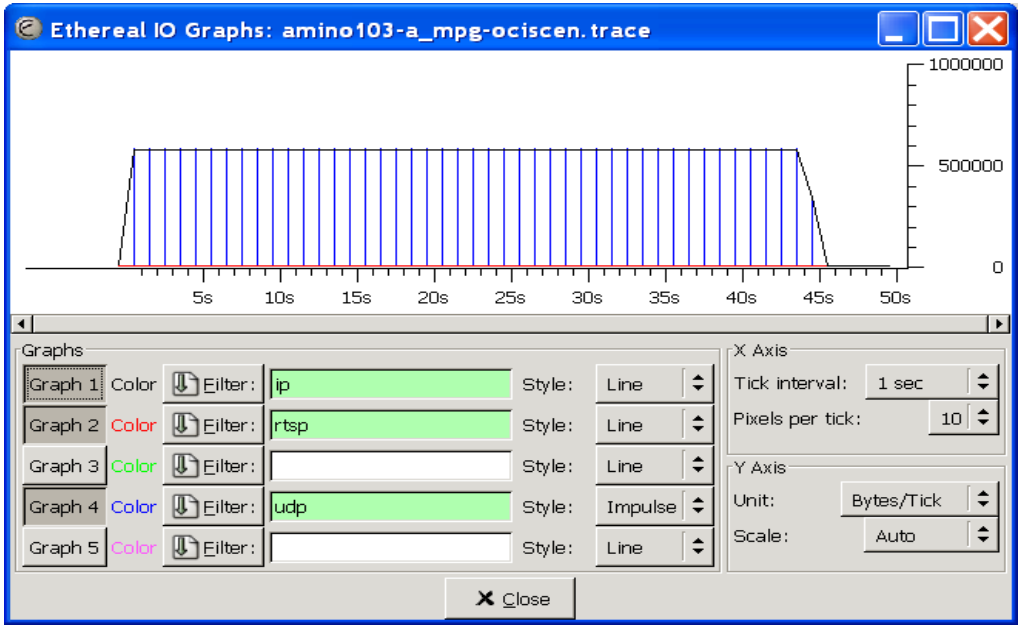

# Terminalna oprema VoIP

- Načelno IP terminale delimo v dve večji skupini
  - strojno osnovani VoIP terminali oziroma IP telefoni in
  - programsko osnovani VoIP terminali
- IP telefon sestoji iz sledečih referenčnih komponent
  - uporabniški vmesnik
  - govorni vmesnik
  - omrežni vmesnik
  - procesorsko jedro s pripadajočo logiko

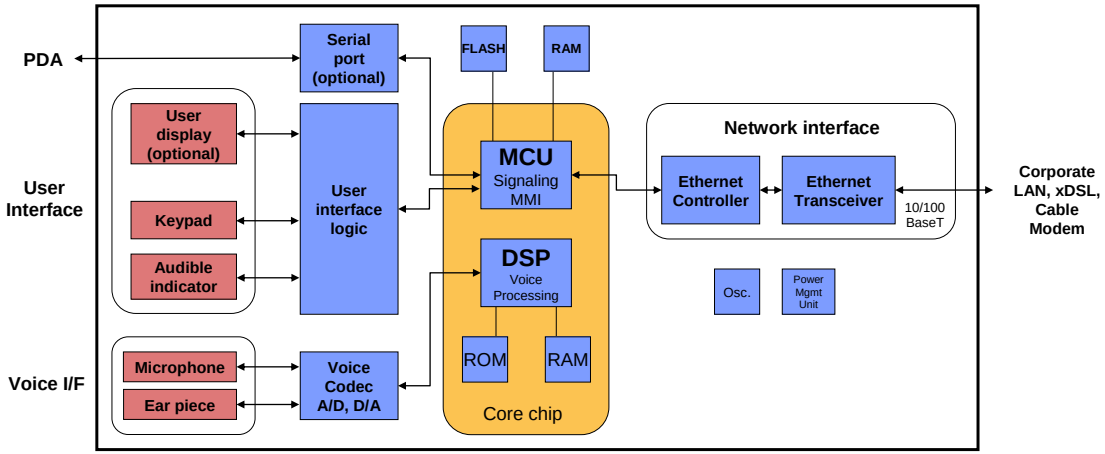

# IP telefon – strojna zasnova

- **Uporabniški vmesnik**
  - tipkovnica
  - prikazovalnik
- **Avdio vmesnik**
  - digitalizacija in formatiranje audio signala
- **Mrežni vmesnik**
  - omrežna komunikacija
- **Procesor (DSP, MCU)**

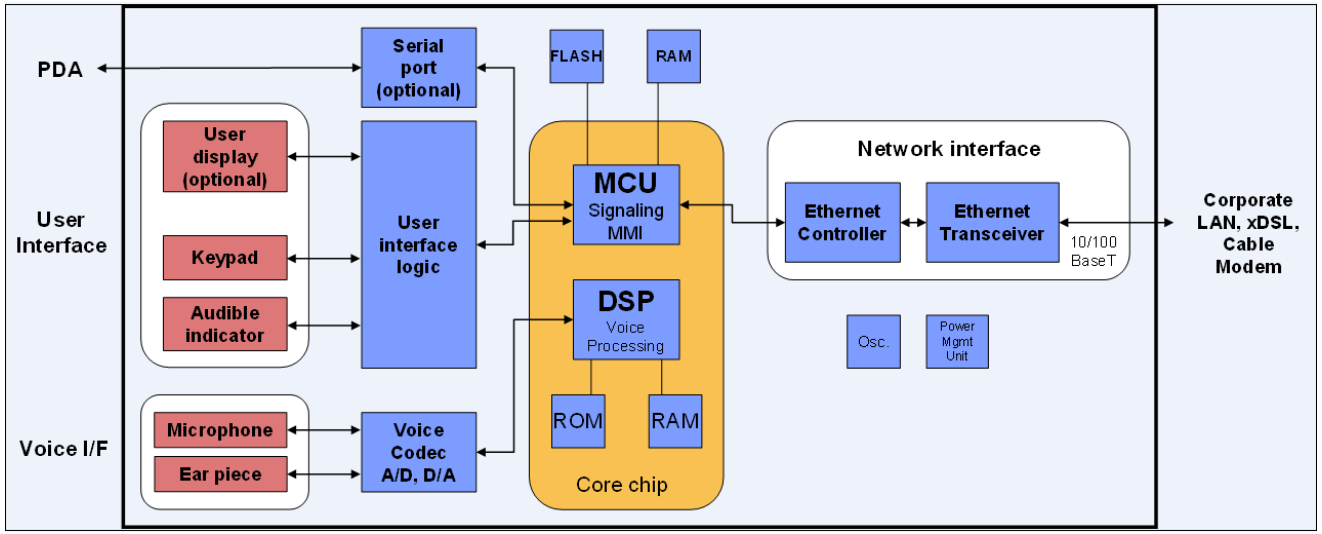

# IP telefon – programska zasnova

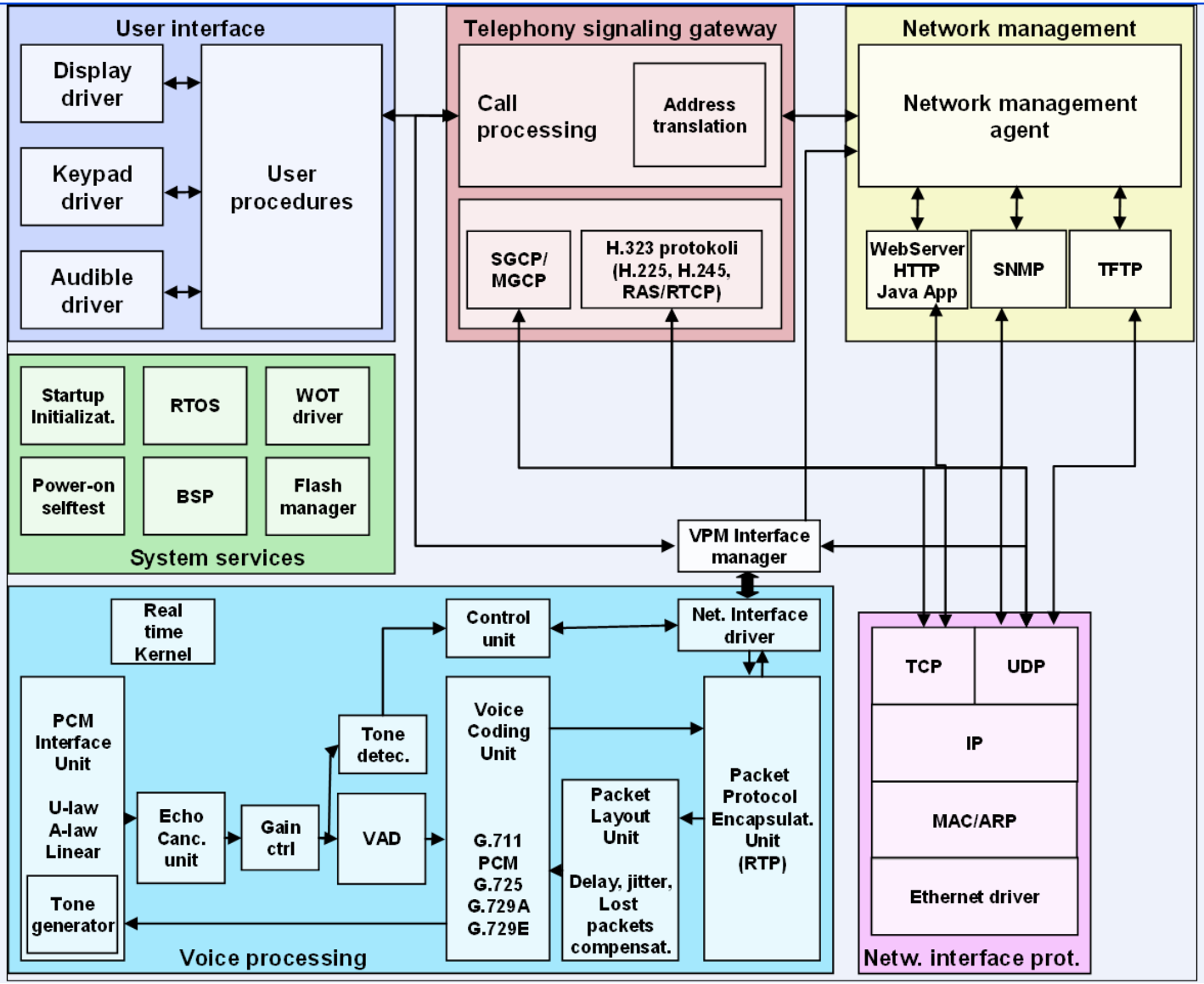

# IP telefon – IskraTel IP10S

# “Soft Phone”

Video
Detach
Now CounterPath is advancing the softphone again.
Not Sending Video
Start
Ready
Your username is: 101
X-Lite
XFER
HOLD
RECORD
AA
AC
DND
CONF
FLASH
REDIAL
MUTE
CLEAR
Powered by COUNTERPATH
Calls & Contacts
Detach
Always Available
Contacts
Name
Friends
becky
Home
Work
Contacts
Calls
Browser

Bria - Klemen
File
View
Contacts
Actions
Help
Available
Luka
Address Book
Contacts
History
Friends
Home
Luka Zebec
Work
COUNTERPATH

MediaRing Talk™
+1 (609) 2587045
Start balance:
1500sec
MY MEDIARING NUMBER
DURATION
Crystal Clear
Digital Power